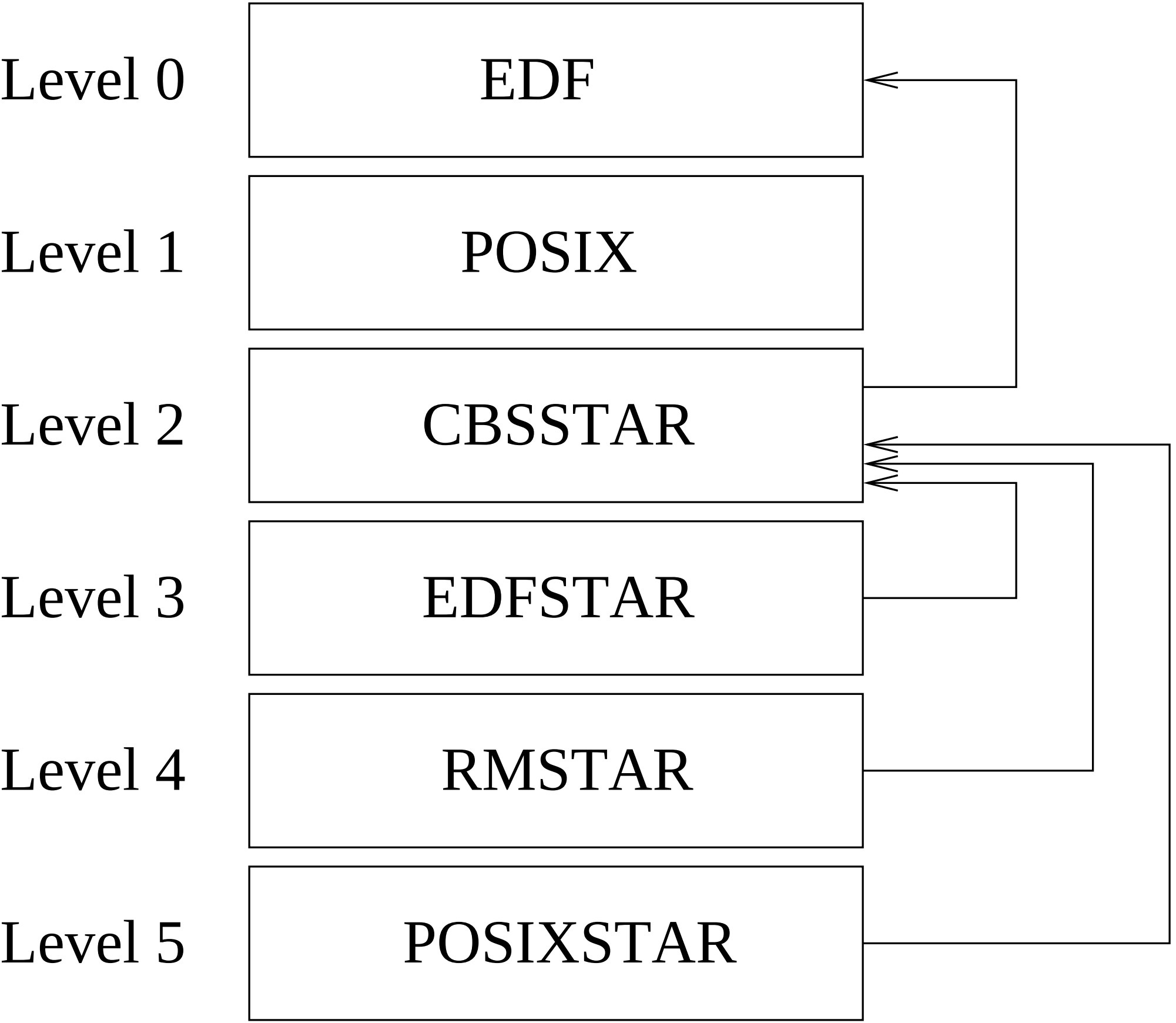
Level 0
EDF
Level 1
POSIX
Level 2
CBSSTAR
Level 3
EDFSTAR
Level 4
RMSTAR
Level 5
POSIXSTAR